OPERATOR'S MANUAL

14 in. ABRASIVE CUT-OFF MACHINE

CM1450

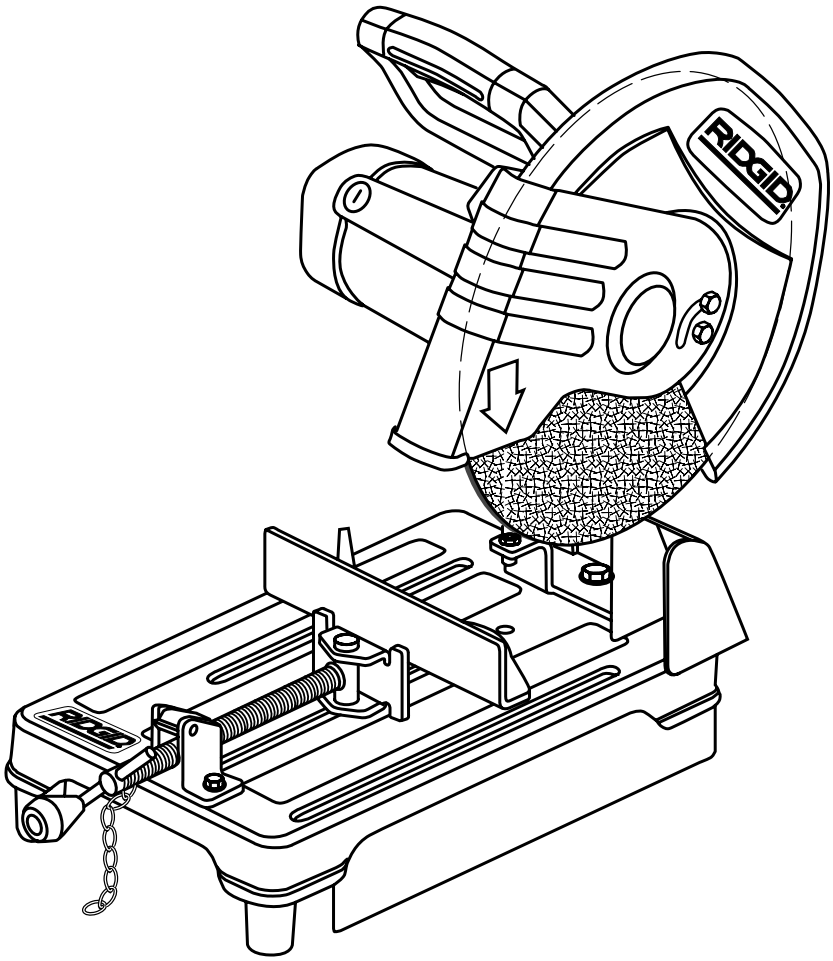

Your new cut-off machine has been engineered and manufactured to our high standards for dependability, ease of operation, and operator safety. When properly cared for, it will give you years of rugged, trouble-free performance.

⚠ WARNING:
To reduce the risk of injury, the user must read and understand the operator's manual before using this product.

Thank you for buying a RIDGID product.

SAVE THIS MANUAL FOR FUTURE REFERENCE

TABLE OF CONTENTS

- Introduction 2
- General Safety Rules 3-4
- Specific Safety Rules 4-5
- Symbols 6-7
- Electrical 8
- Features 8-10
- Unpacking 11
- Loose Parts 11
- Operation 12-14
- Adjustments 15-17
- Maintenance 18
- Troubleshooting 19
- Warranty 21
- Parts Ordering/Service 22

INTRODUCTION

Your cut-off machine has many features for making the use of this product more pleasant and enjoyable. Safety, performance, and dependability have been given top priority in the design of this product making it easy to maintain and operate.

IMPORTANT INFORMATION ON THE USE OF CUT-OFF WHEELS AND ANSI B7.1 can be obtained by writing to:

GRINDING WHEEL INSTITUTE
30200 Detroit Road
Cleveland, OH 44145-1967

GENERAL SAFETY RULES

WARNING:
Read and understand all instructions. Failure to follow all instructions listed below may result in electric shock, fire and/or serious personal injury.

READ ALL INSTRUCTIONS

- **KNOW YOUR POWER TOOL.** Read the operator's manual carefully. Learn the cut-off machine's applications and limitations as well as the specific potential hazards related to this tool.
- **GUARD AGAINST ELECTRICAL SHOCK BY PREVENTING BODY CONTACT WITH GROUNDED SURFACES.** For example; pipes, radiators, ranges, refrigerator enclosures.
- **KEEP GUARDS IN PLACE** and in working order. Never operate the tool with any guard or cover removed. Make sure all guards are operating properly before each use.
- **REMOVE ADJUSTING KEYS AND WRENCHES.** Form habit of checking to see that keys and adjusting wrenches are removed from tool before turning it on.
- **KEEP WORK AREA CLEAN.** Cluttered areas and benches invite accidents. **DO NOT** leave tools or material on the machine while it is in operation.
- **AVOID DANGEROUS ENVIRONMENT.** Don't use power tools in damp or wet locations or expose to rain. Keep work area well lit.
- **KEEP CHILDREN AND VISITORS AWAY.** All visitors should wear safety glasses and be kept a safe distance from work area. Do not let visitors contact tool or extension cord while operating.
- **MAKE WORKSHOP CHILDPROOF** with padlocks or master switches, or by removing starter keys.
- **DON'T FORCE TOOL.** It will do the job better and safer at the feed rate for which it was designed.
- **USE RIGHT TOOL.** Don't force tool or attachment to do a job it was not designed for. Don't use it for a purpose not intended.
- **MAKE SURE YOUR EXTENSION CORD IS IN GOOD CONDITION.** When using an extension cord, be sure to use one heavy enough to carry the current your product will draw. An undersized cord will cause a drop in line voltage resulting in loss of power and overheating. A wire gage size (A.W.G.) of at least **14** is recommended for an extension cord **25** feet or less in length. If in doubt, use the next heavier gage. The smaller the gage number, the heavier the cord.
- **DRESS PROPERLY.** Do not wear loose clothing, gloves, neckties, or jewelry. They can get caught and draw you into moving parts. Rubber gloves and nonskid footwear are recommended when working outdoors. Also wear protective hair covering to contain long hair.
- **ALWAYS WEAR SAFETY GLASSES WITH SIDE SHIELDS.** Everyday eyeglasses have only impact-resistant lenses; they are **NOT** safety glasses.
- **SECURE WORK.** Use clamps or a vise to hold work when practical. It's safer than using your hand and frees both hands to operate tool.
- **DON'T OVERREACH.** Keep proper footing and balance at all times.
- **MAINTAIN TOOLS WITH CARE.** Keep tools sharp and clean for better and safer performance. Follow instructions for lubricating and changing accessories.
- **DISCONNECT TOOLS.** When not in use, before servicing, or when changing attachments, wheels, bits, cutters, etc., all tools should be disconnected.
- **AVOID ACCIDENTAL STARTING.** Be sure switch is off when plugging in.
- **USE RECOMMENDED ACCESSORIES.** The use of improper accessories may cause risk of injury.
- **NEVER STAND ON TOOL.** Serious injury could occur if the tool is tipped or if the cutting wheel is unintentionally contacted.
- **CHECK DAMAGED PARTS.** Before further use of the tool, a guard or other part that is damaged should be carefully checked to determine that it will operate properly and perform its intended function. Check for alignment of moving parts, binding of moving parts, breakage of parts, mounting and any other conditions that may affect its operation. A guard or other part that is damaged must be properly repaired or replaced by an authorized service center to avoid risk of personal injury.
- **NEVER LEAVE TOOL RUNNING UNATTENDED. TURN POWER OFF.** Don't leave tool until it comes to a complete stop.
- **PROTECT YOUR LUNGS.** Wear a face or dust mask if the cutting operation is dusty.
- **PROTECT YOUR HEARING.** Wear hearing protection during extended periods of operation.
- **DON'T ABUSE CORD.** Never yank cord to disconnect from receptacle. Keep cord from heat, oil, and sharp edges.
- **USE OUTDOOR EXTENSION CORDS.** When tool is used outdoors, use only extension cords with approved ground connection that are intended for use outdoors and so marked.
- **WHEELS COAST AFTER TURN OFF.**

GENERAL SAFETY RULES

- **NEVER USE IN AN EXPLOSIVE ATMOSPHERE.** Normal sparking of the motor could ignite fumes.
- **INSPECT TOOL CORDS PERIODICALLY.** If damaged, have repaired by a qualified service technician at an authorized service facility. The conductor with insulation having an outer surface that is green with or without yellow stripes is the equipment-grounding conductor. If repair or replacement of the electric cord or plug is necessary, do not connect the equipment-grounding conductor to a live terminal. Repair or replace a damaged or worn cord immediately. Stay constantly aware of cord location and keep it well away from the rotating wheel.
- **INSPECT EXTENSION CORDS PERIODICALLY** and replace if damaged.
- **KEEP TOOL DRY, CLEAN, AND FREE FROM OIL AND GREASE.** Always use a clean cloth when cleaning. Never use brake fluids, gasoline, petroleum-based products, or any solvents to clean tool.
- **STAY ALERT AND EXERCISE CONTROL.** Watch what you are doing and use common sense. Do not operate tool when you are tired. Do not rush.
- **DO NOT USE TOOL IF SWITCH DOES NOT TURN IT ON AND OFF.** Have defective switches replaced by an authorized service center.

SPECIFIC SAFETY RULES

- **USE ONLY CORRECT WHEELS. Do not** use wheels with incorrect size holes. Never use wheel washers or wheel screws that are defective or incorrect. The maximum wheel capacity of your cut-off machine is 14 in. (356 mm).
- **DO NOT REMOVE THE MACHINE'S WHEEL GUARDS.** Never operate the machine with any guard or cover removed. Make sure all guards are operating properly before each use.
- **KEEP HANDS AWAY FROM CUTTING AREA.** Keep hands away from wheel. Do not reach underneath work or around or under the wheel while the wheel is rotating. Do not attempt to remove cut material while wheel is moving.
- **ALWAYS SUPPORT LONG MATERIAL.** To minimize risk of tipping machine, always support long material.
- **BEFORE MAKING A CUT, BE SURE ALL ADJUSTMENTS ARE SECURE.**
- **ALWAYS USE THE VISE CLAMP** to secure the material.
- **NEVER TOUCH WHEEL** or other moving parts during use.
- **NEVER START THE CUT-OFF MACHINE WHEN THE WHEEL IS IN CONTACT WITH THE MATERIAL.**
- **NEVER** cut more than one piece of material at a time. **DO NOT STACK** more than one piece of material on the machine base at a time.
- **NEVER PERFORM ANY OPERATION "FREEHAND".** Always secure the material to be cut in the vise.
- **NEVER** hand hold a piece of material. Material will become very hot while being cut.
- **NEVER** reach behind, under, or within three inches of the wheel and its cutting path with your hands and fingers for any reason.
- **NEVER** reach to pick up a piece of material, a piece of scrap, or anything else that is in or near the cutting path of the wheel.
- **AVOID AWKWARD OPERATIONS AND HAND POSITIONS** where a sudden slip could cause your hand to move into the wheel. **ALWAYS** make sure you have good balance.
- **NEVER** stand or have any part of your body in line with the path of the wheel.
- **ALWAYS** release the power switch and allow the wheel to stop rotating before raising wheel guard or removing material.
- **DO NOT TURN THE MOTOR SWITCH ON AND OFF RAPIDLY.** This could cause the wheel to loosen and could create a hazard. Should this ever occur, stand clear and allow the wheel to come to a complete stop. Disconnect your cut-off machine from the power supply and securely retighten the wheel arbor bolt after checking the wheel for damage.
- **WHEN SERVICING USE ONLY IDENTICAL RIDGID REPLACEMENT PARTS.** Use of any other parts may create a hazard or cause product damage.
- **NEVER** leave the cut-off machine unattended while connected to a power source.
- **IF ANY PART OF THIS CUT-OFF MACHINE IS MISSING** or should break, bend, or fail in any way, or should any electrical component fail to perform properly, shut off the power switch, remove the machine plug from the power source and have damaged, missing, or failed parts replaced before resuming operation.
- **MAKE SURE THE CUT-OFF WHEEL IS SECURELY MOUNTED** as described in the operating instructions before connecting the tool to a power supply. Do not tighten wheel excessively, since this can cause cracks.
- **CHECK THE WHEEL FOR FISSURES AND CRACKS,** and test for normal operation prior to use.
- **ONLY USE A CUT-OFF WHEEL RATED FOR 3900 RPM OR GREATER** and manufactured in compliance with ANSI B7.1. Always store wheels in a dry place with little temperature variation.
- **ALWAYS EASE THE ABRASIVE WHEEL AGAINST THE MATERIAL** when starting to cut. A harsh impact can break the wheel.

SPECIFIC SAFETY RULES

- **BEFORE CUTTING** press the trigger switch and allow the cut-off wheel to reach full speed.
- **MAKE SURE THE WORK AREA HAS AMPLE LIGHTING** to see the work and that no obstructions will interfere with safe operation **BEFORE** performing any work using your cut-off machine.
- **DO NOT OPERATE THIS TOOL WHILE UNDER THE INFLUENCE OF DRUGS, ALCOHOL, OR ANY MEDICATION.**
- **ALWAYS STAY ALERT!** Do not allow familiarity (gained from frequent use of your cut-off machine) to cause a careless mistake. **ALWAYS REMEMBER** that a careless fraction of a second is sufficient to inflict severe injury.
- **STAY ALERT AND EXERCISE CONTROL.** Watch what you are doing and use common sense. **Do not operate tool when you are tired. Do not rush.**
- **SAVE THESE INSTRUCTIONS.** Refer to them frequently and use them to instruct other users. If you loan someone this tool, loan them these instructions also.

WARNING:

Some dust created by power sanding, sawing, grinding, drilling, and other construction activities contains chemicals known to cause cancer, birth defects or other reproductive harm. Some examples of these chemicals are:

- lead from lead-based paints,
- crystalline silica from bricks and cement and other masonry products, and
- arsenic and chromium from chemically-treated lumber.

Your risk from these exposures varies, depending on how often you do this type of work. To reduce your exposure to these chemicals: work in a well ventilated area, and work with approved safety equipment, such as those dust masks that are specially designed to filter out microscopic particles.

SYMBOLS

Some of the following symbols may be used on this tool. Please study them and learn their meaning. Proper interpretation of these symbols will allow you to operate the tool better and safer.

SYMBOL	NAME	DESIGNATION/EXPLANATION
V	Volts	Voltage
A	Amperes	Current
Hz	Hertz	Frequency (cycles per second)
W	Watt	Power
min	Minutes	Time
∿	Alternating Current	Type of current
⎓	Direct Current	Type or a characteristic of current
n_o	No Load Speed	Rotational speed, at no load
⧈	Class II Construction	Double-insulated construction
.../min	Per Minute	Revolutions, strokes, surface speed, orbits etc., per minute
	Wet Conditions Alert	Do not expose to rain or use in damp locations.
	Read The Operator's Manual	To reduce the risk of injury, user must read and understand operator's manual before using this product.
	Eye Protection	Always wear safety goggles or safety glasses with side shields and a full face shield when operating this product.
	Safety Alert	Precautions that involve your safety.
	No Hands Symbol	Failure to keep your hands away from the blade will result in serious personal injury.
	No Hands Symbol	Failure to keep your hands away from the blade will result in serious personal injury.
	No Hands Symbol	Failure to keep your hands away from the blade will result in serious personal injury.
	No Hands Symbol	Failure to keep your hands away from the blade will result in serious personal injury.

SYMBOLS

The following signal words and meanings are intended to explain the levels of risk associated with this product.

SYMBOL	SIGNAL	MEANING
⚠	**DANGER:**	Indicates an imminently hazardous situation, which, if not avoided, will result in death or serious injury.
⚠	**WARNING:**	Indicates a potentially hazardous situation, which, if not avoided, could result in death or serious injury.
⚠	**CAUTION:**	Indicates a potentially hazardous situation, which, if not avoided, may result in minor or moderate injury.
	CAUTION:	(Without Safety Alert Symbol) Indicates a situation that may result in property damage.

SERVICE

Servicing requires extreme care and knowledge and should be performed only by a qualified service technician. For service we suggest you return the product to your nearest **AUTHORIZED SERVICE CENTER** for repair. When servicing, use only identical replacement parts.

⚠ WARNING:

To avoid serious personal injury, do not attempt to use this product until you read thoroughly and understand completely the operator's manual. Save this operator's manual and review frequently for continuing safe operation and instructing others who may use this product.

⚠ WARNING:

The operation of any tool can result in foreign objects being thrown into your eyes, which can result in severe eye damage. Before beginning operation, always wear safety goggles or safety glasses with side shields and a full face shield when needed. We recommend Wide Vision Safety Mask for use over eyeglasses or standard safety glasses with side shields. Always wear eye protection which is marked to comply with ANSI Z87.1.

SAVE THESE INSTRUCTIONS

ELECTRICAL

EXTENSION CORDS

Use only 3-wire extension cords that have 3-prong grounding plugs and 3-pole receptacles that accept the tool's plug. When using a power tool at a considerable distance from the power source, use an extension cord heavy enough to carry the current that the tool will draw. An undersized extension cord will cause a drop in line voltage, resulting in a loss of power and causing the motor to overheat. Use the chart provided below to determine the minimum wire size required in an extension cord. Only round jacketed cords listed by Underwriter's Laboratories (UL) should be used.

Length of Extension Cord	Wire Size (A.W.G.)
Up to 25 feet	14
26-50 feet	12

When working with the tool outdoors, use an extension cord that is designed for outside use. This is indicated by the letters **WA** on the cord's jacket.

Before using an extension cord, inspect it for loose or exposed wires and cut or worn insulation.

CAUTION:
Keep the cord away from the cutting area and position the cord so that it will not be caught on material, tools, or other objects during cutting.

ELECTRICAL CONNECTION

Your Cut-Off Machine is powered by a precision built electric motor. It should be connected to a **power supply that is 120 volts, 60 Hz, AC only (normal household current).** Do not operate this tool on direct current (DC). A substantial voltage drop will cause a loss of power and the motor will overheat. If the machine does not operate when plugged into an outlet, double check the power supply.

POWER SUPPLY

Before operating your cut-off machine, check your power supply and make sure it meets the requirements listed on the tool's data plate. A substantial voltage drop will cause a loss of power and machine overheating.

Common causes of power loss and machine overheating are insufficient extension cord size and multiple tools operating from the same power source.

GROUNDING INSTRUCTIONS

In the event of a malfunction or breakdown, grounding provides a path of least resistance for electric current to reduce the risk of electric shock. This tool is equipped with an electric cord having an equipment-grounding conductor and a grounding plug. The plug must be plugged into a matching outlet that is properly installed and grounded in accordance with all local codes and ordinances.

Do not modify the plug provided. If it will not fit the outlet, have the proper outlet installed by a qualified electrician. Improper connection of the equipment-grounding conductor can result in a risk of electric shock. The conductor with insulation having an outer surface that is green with or without yellow stripes is the equipment-grounding conductor. If repair or replacement of the electric cord or plug is necessary, do not connect the equipment-grounding conductor to a live terminal.

Check with a qualified electrician or service personnel if the grounding instructions are not completely understood, or if in doubt as to whether the tool is properly grounded.

Repair or replace a damaged or worn cord immediately.

This tool is intended for use on a circuit that has an outlet like the one shown in Figure 1. It also has a grounding pin like the one shown.

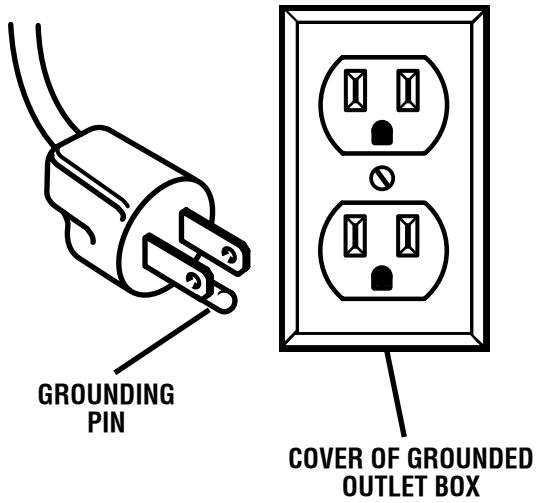

Fig. 1

FEATURES

PRODUCT SPECIFICATIONS

- Input..... 120V, 60 Hz, AC Only,15 Amperes
- No Load Speed.....3900/min.
- Arbor Diameter .....1 in. (25.4 mm)
- Wheel Diameter .....14 in. (356 mm)
- Net Weight ..... 51 lbs. (23 kg)
- Fence Angle.....Right (45°), Left (0°)
- Vise Clamp Angle .....Right (45°), Left (45°)
- Maximum Cutting Capacities:
  Round Pipe..... 5 in. (127 mm) outside diameter
  Steel Studs ..... Full Bundle
  Bar Stock..... 2 in. (50.8 mm)

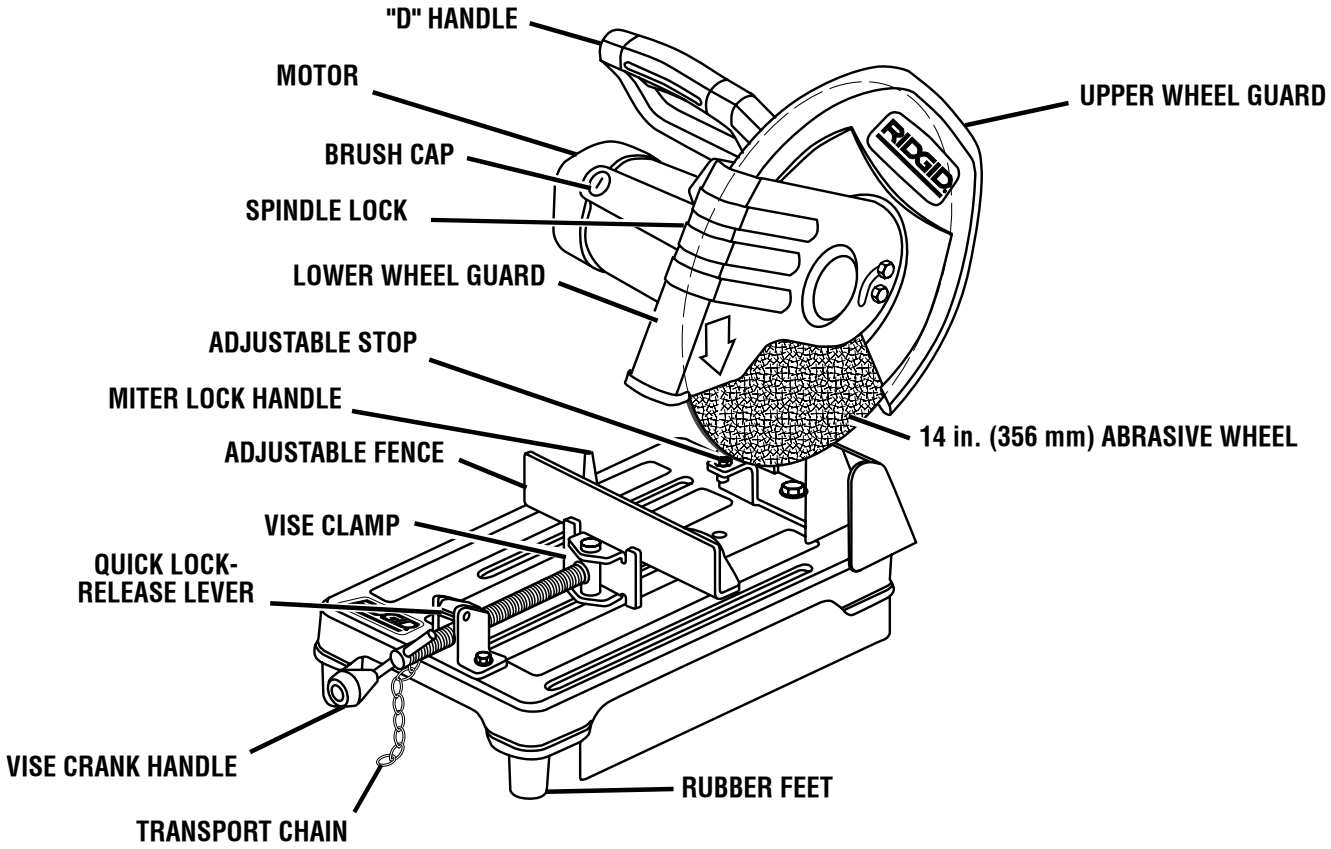

Fig. 2

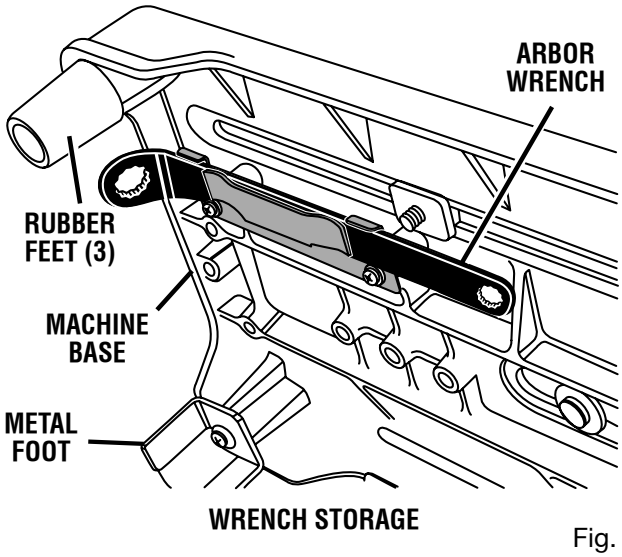

Fig. 3

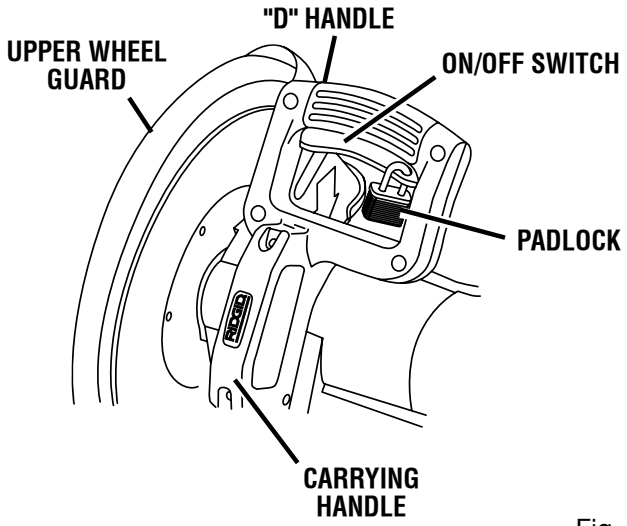

Fig. 4

FEATURES

KNOW YOUR CUT-OFF MACHINE

See Figures 2 - 4.

Before attempting to use your machine, familiarize yourself with all operating features and safety requirements.

WARNING:
Do not allow familiarity with your machine to make you careless. Remember that a careless fraction of a second is sufficient to inflict severe injury.

LOWER WHEEL GUARD

The lower wheel guard provides protection from each side of the wheel. Contact with the material causes the lower guard to raise over the upper wheel guard as the wheel is lowered into the material.

UPPER WHEEL GUARD

Protects user from abrasive wheel contact on upper portion of wheel.

VISE CLAMP

A vise clamp has been provided with your cut-off machine. It is located on the end of the vise screw and provides greater control by clamping the material to the fence. It also prevents the material from creeping toward the wheel during a cutting operation.

ADJUSTABLE FENCE

The fence on your cut-off machine has been provided to support the material and provide clamping support to the vise for holding your material securely when making all cuts. It is an adjustable fence that has been provided to make your cut-off machine more versatile. It adjusts from 0° to 45° to the right for making angled cuts. The hole pattern allows it to be moved forward when making cuts in tall or thick stock, such as square stock or tube stock. The hole pattern allows it to be moved back when making cuts in stock that is thin or wide, such as angle stock.

QUICK LOCK-RELEASE LEVER

A quick lock-release lever has been provided on your cut-off machine. This feature allows you to open and close the vise clamp quickly without repetitive turning of the vise crank handle.

SPINDLE LOCK

A spindle lock has been provided for locking the spindle which keeps the wheel in your machine from rotating. Depress and hold the spindle lock while installing, changing, or removing wheel only.

TRANSPORT CHAIN

The cut-off machine can be locked in the lowered position for compact storage. The chain is only used during carrying and storage operations.

"D" HANDLE

The handle contains the trigger switch with a padlock locking hole to prevent unauthorized use. The wheel is lowered into the material by pushing down on the handle. The wheel will return to its upright position when the handle is released.

CARRYING HANDLE

This handle is built into the unit to move it from one location to another. Before attempting to pick up the unit by the carrying handle always lock the power head in the down position using the transport chain.

ON/OFF SWITCH

To start the tool, squeeze the trigger. Release the trigger to stop the tool. Install a padlock through the hole in the trigger to help prevent unauthorized use.

ADJUSTABLE STOP

In the down (full cut) position, the pivot arm hits an adjustable stop on the support bracket.

ARBOR WRENCH

The arbor wrench is found on the underside of the base. Use wrench when replacing cut-off wheel or when making fence angular adjustments.

MOTOR

This machine has a strong motor with sufficient power to handle tough cutting jobs. It also has externally accessible brushes for ease of servicing.

14 in. (356 mm) ABRASIVE WHEEL

A 14 in. (356 mm) abrasive wheel is included with your cut-off machine. It will cut materials up to 5 in. (127 mm) thick or 8 in. (203 mm) wide, depending upon the thickness or width of the material and the setting at which the cut is being made.

MITER LOCK HANDLE

Allows the adjustable fence to be pivoted at a given angle then locked in place.

UNPACKING

Your cut-off machine has been shipped completely assembled.

- Remove all loose parts from the carton.
- Remove the packing materials from around your machine.
- Carefully lift the cut-off machine from the carton and place it on a level work surface. This is a heavy machine. To avoid back injury, get help when needed.
- Do not discard the packing materials until you have carefully inspected the machine, identified all loose parts, and satisfactorily operated your new cut-off machine.
- Your cut-off machine has been shipped with the machine arm locked in the down position. To release the arm, push down on top of the machine arm and remove transport chain from bottom of motor housing. *See Figure 2.* Hand pressure should remain on the machine arm to prevent sudden rise upon release of the transport chain.
- Examine all parts to make sure no breakage or damage has occurred during shipping.

If any parts are damaged or missing, do not attempt to plug in the power cord and turn the switch on until the damaged or missing parts are obtained and are installed correctly. Contact your nearest RIDGID dealer or call 1-866-539-1710 for assistance if any parts are missing or damaged.

WARNING:
If any parts are missing do not operate your cut-off machine until the missing parts are replaced. Failure to do so could result in possible serious injury.

LOOSE PARTS

The following items are included with your Cut-Off Machine:

- Arbor Wrench, (Stored under Machine)
- Operator's Manual
- Warranty Registration

WARNING:
Do not allow familiarity with tools to make you careless. Remember that a careless fraction of a second is sufficient to inflict severe injury.

WARNING:
This cut-off machine has been designed for cutting metals, using reinforced abrasive cut-off wheels only. Do not remove the wheel, install a steel blade, and attempt to cut other types of materials such as wood, masonry, etc. Attempting to cut these other types of materials could cause an accident resulting in possible serious personal injury.

WARNING:
Always wear safety goggles or safety glasses with side shields during power tool operation or when blowing dust. If operation is dusty, also wear a dust mask.

WARNING:
Always use the vise clamp on the cut-off machine to prevent accidents that could result in possible serious personal injury.

WARNING:
Failure to unplug cut-off machine could result in accidental starting causing possible serious personal injury.

APPLICATIONS

(Use only for the purposes listed below)

- Cutting all types of metals such as 2 in. x 6 in. steel framing studs.
- Cutting hard metal iron stock such as square bar stock and angle iron.
- Cutting metal tube and pipe stock.

ON/OFF SWITCH

To turn your cut-off machine **ON**, squeeze the on/off switch located in the "D" handle.

To turn it **OFF**, release the on/off switch.

CUTTING WITH YOUR CUT-OFF MACHINE

See Figures 5 and 6.

WARNING:
Do not attempt to cut wood or masonry with this cut-off machine. Never cut magnesium or magnesium alloy with this machine. Failure to comply could result in serious personal injury.

- To prevent machine movement or tipping during cutting operation, secure cut-off machine in place to a workbench or work surface that is also secure.

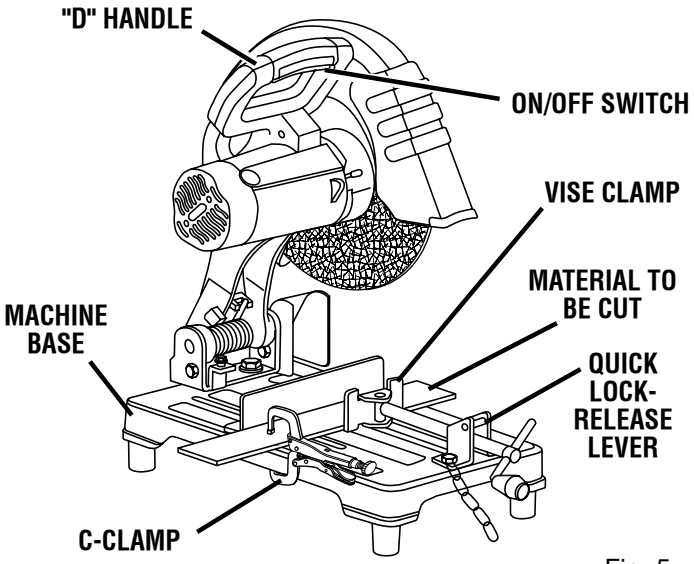

Fig. 5

WARNING:
Large, circular, or irregularly shaped material may require additional means of clamping to be secured in place adequately for cutting. Use “C” clamps that can be mounted along the left and front side of the machine base. Also use blocks to hold material securely. Failure to comply could result in serious personal injury.

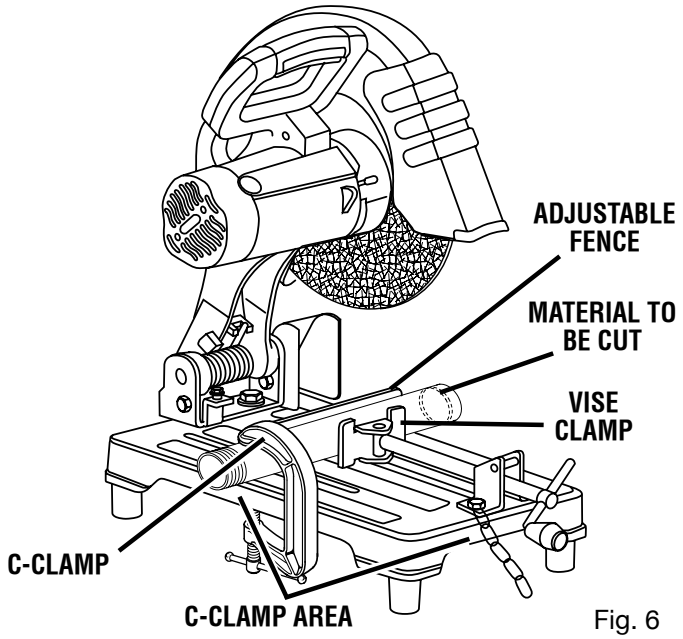

Fig. 6

CUT-OFF

See Figures 7 and 8.

A cut-off is made by cutting across the width of the material. A straight crosscut is made with the adjustable fence set at the zero degree position. Angled cut-offs are made with the adjustable fence set at some angle other than zero.

TO CUT WITH YOUR CUT-OFF MACHINE:

- Firmly secure the material to be cut using the machine's vise (adjustable fence and vise clamp).
- loosen the miter lock handle securing the fence. *See Figures 7 and 8.*
- Rotate the adjustable fence to the desired angle.
- Retighten miter lock handle securing fence.

WARNING:
To avoid serious personal injury, always tighten vise adjustment bolt securely before making a cut. Failure to do so could result in movement of the material while making a cut.

- Place the material flat on the machine base with one surface securely against the adjustable fence.
- Align cutting line on the material with the edge of the abrasive wheel.
- Push in the vise crank handle to set the vise clamp against the material. Turn the vise crank handle 1/2 to 1 turn clockwise to securely clamp the material to the fence.

WARNING:
To avoid serious personal injury, keep your hands at least 3 in. (76.2 mm) from wheel.

- When cutting long pieces, support the opposite end of the material with a roller stand or with a work surface level with the machine base.

WARNING:
Never perform any cutting operation freehand (without placing material in the vise). Material will get hot during cutting operation. Keep hands off of metal being cut to avoid serious personal injury.

- Before turning on machine, perform a dry run of the cutting operation just to make sure that no problems will occur when the cut is made.
- Start the machine by grasping the handle and fully squeezing the on/off switch. Allow several seconds for the wheel to build up to full speed before letting it come into contact with the material to be cut.
- Once it reaches full speed slowly lower the "D" handle until the cut-off wheel comes in contact with the material being cut. Continue to use steady and even pressure to obtain a uniform cut through the material. Never force the wheel into the material being cut.
- When the cut is complete, release the on/off switch and allow the wheel to stop rotating before raising the wheel out of material.

WARNING:
Do not touch the cut material until it cools or you can be burned. Failure to heed this warning could result in serious personal injury.

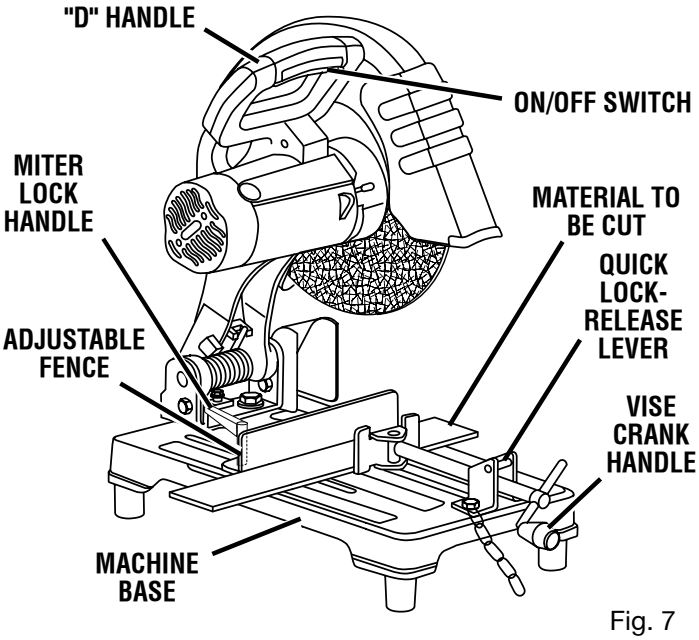

Fig. 7

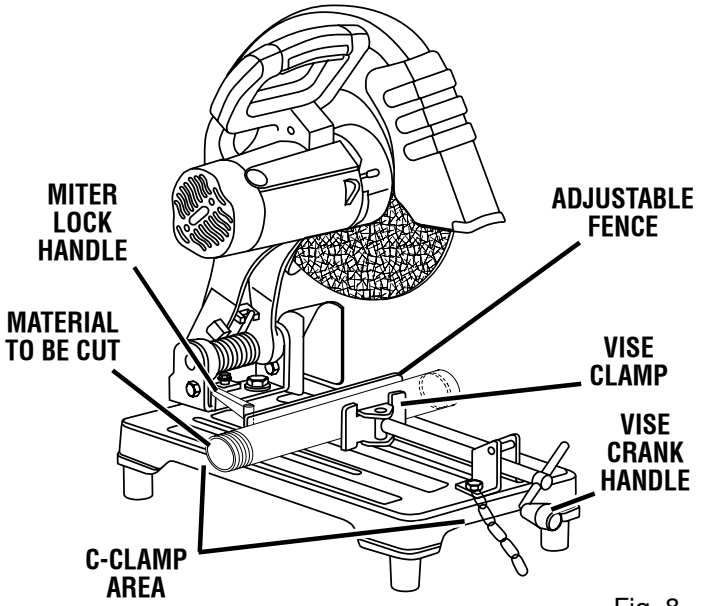

Fig. 8

TO USE THE QUICK LOCK-RELEASE LEVER AND VISE CLAMP

To Loosen:

See Figure 9.

WARNING:
Failure to unplug cut-off machine could result in accidental starting causing possible serious personal injury.

- Unplug your cut-off machine.
- Release tension on the vise clamp by rotating the vise crank handle 1/2 to 1 turn counterclockwise.
- Lift up the quick lock-release lever as shown in figure 9 and pull back on vise crank handle to slide open the vise.

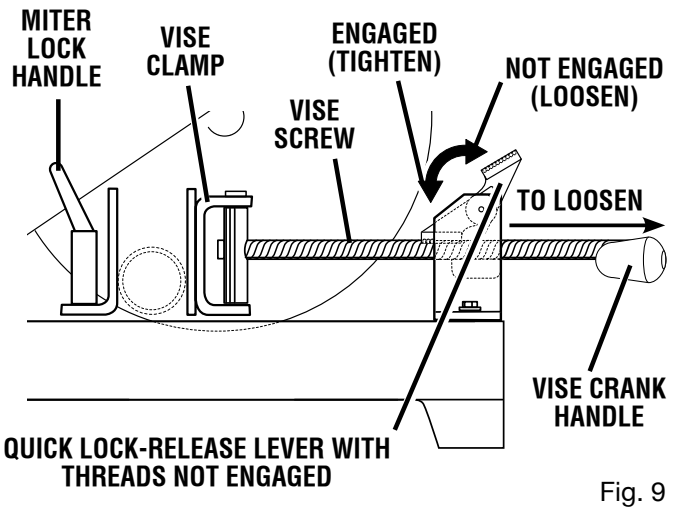

Fig. 9

To Tighten:

See Figure 10.

WARNING:
Failure to unplug cut-off machine could result in accidental starting causing possible serious personal injury.

- Unplug your cut-off machine.
- Push the vise crank handle forward to slide the vise clamp against the material.
- Rotate the quick lock-release lever forward and push down as shown in figure 10 to engage its threads with the vise screw.
- Rotate the vise crank handle clockwise to tighten the vise clamp against the material.

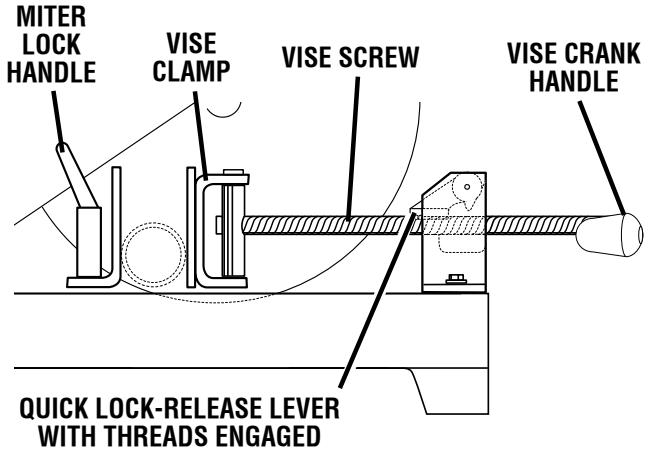

Fig. 10

WARNING:
To prevent accidental starting that could cause possible serious personal injury, assemble all parts to your cut-off machine before connecting it to power supply. Machine should never be connected to power supply when you are assembling parts, making adjustments, installing or removing wheels, or when not in use.

As mentioned previously your cut-off machine has been factory assembled and adjusted. After extended use and wear, the wheel will need to be replaced with a new one.

WARNING:
A 14 in. (356 mm) wheel is the maximum wheel capacity of your cut-off machine. Never use a wheel that is too thick to allow outer flange to engage with the flats on the spindle. Larger wheels will come in contact with the wheel guards, while thicker wheels will prevent the bolt from securing the wheel on the arbor. Either of these situations could result in a serious accident and can cause serious personal injury.

REMOVAL AND INSTALLATION OF WHEEL

To Remove:

See Figure 11.

WARNING:
Failure to unplug cut-off machine could result in accidental starting causing possible serious personal injury.

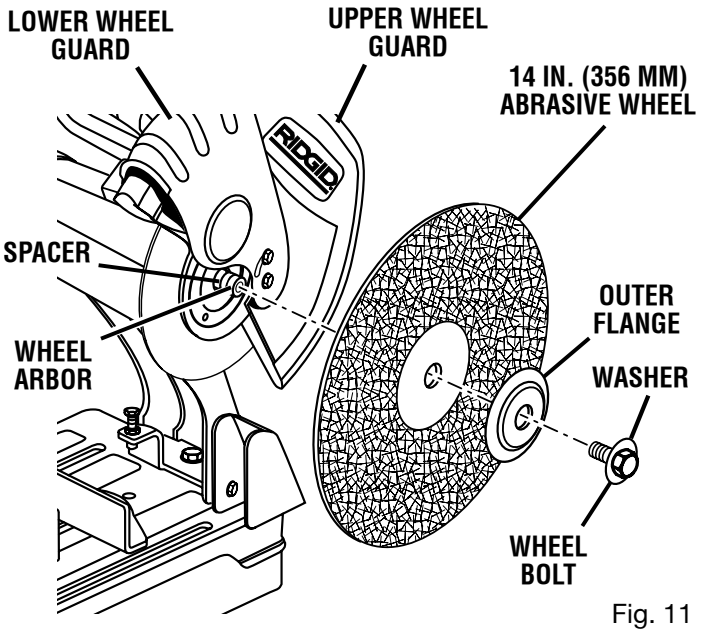

Fig. 11

- Unplug your cut-off machine.
- Push down on "D" handle (machine arm) and remove transport chain from hook on motor housing to release machine arm.
- Raise machine arm to its full raised position. Be cautious when raising, machine arm is spring loaded.
- Rotate lower wheel guard upward, exposing 8 mm wheel bolt that secures abrasive wheel to wheel arbor.
- Depress the spindle lock and rotate bolt until spindle locks, preventing shaft from rotating.
- Using the arbor wrench provided, loosen and remove bolt.

  NOTE: Wheel bolt has right hand threads. Turn wheel bolt counterclockwise to loosen.
- Remove wheel bolt, outer flange and wheel.

To Install:

See Figure 11.

- Unplug your cut-off machine.
- Inspect the replacement wheel for defects such as cracks, chipping, and correct speed rating. If defects are found or the speed rating is not greater than 3900 rpm, **do not** use. Select another wheel.
- Clean debris from the wheel arbor.
- Place new wheel over spacer, then place both on wheel arbor against fixed inner flange.
- Clean outer flange, then align flats with flats on wheel arbor and slide outer flange onto arbor until it is flush.
- Place recessed side of outer flange against wheel, then insert washer and wheel bolt into threaded end of wheel arbor.
- Start threads and turn wheel bolt clockwise to snugly tighten.
- Depress the spindle lock and rotate bolt until spindle locks, preventing shaft from rotating.
- Using the arbor wrench provided, securely tighten wheel bolt.

  NOTE: Wheel bolt has right hand threads. Turn wheel bolt clockwise to tighten.

WARNING:
Do not overtighten wheel bolt. Overtightening can cause the new wheel to crack, resulting in premature failure and possible serious personal injury.

TO ADJUST WIDTH OF CUT

See Figure 12.

WARNING:
Failure to unplug cut-off machine could result in accidental starting causing possible serious personal injury.

The stationary vise can be repositioned by removing the vise adjustment bolt.

- Unplug your cut-off machine.
- To increase the width of cut of your cut-off machine, use the arbor wrench to loosen and remove the vise adjustment bolt securing stationary vise to machine base.
- Reposition the stationary vise with one of three threaded holes in back of the machine base.
- Install vise adjustment bolt into machine base.
- Check and adjust fence to desired cutting angle.
- Replace and tighten the vise adjustment bolt. The maximum width capacity is approximately 8-1/4 in. (210 mm) at 90° and 5 in. (127 mm) at 45°.
- Return arbor wrench to its storage area in base.

TO ADJUST CUTTING ANGLE

See Figures 12 - 13.

WARNING:
Failure to unplug cut-off machine could result in accidental starting causing possible serious personal injury.

- Unplug your cut-off machine.
- Loosen the miter lock handle by pushing down and rotating counterclockwise.
- Rotate fence until the desired angle of cut on the scale is aligned with the indicator in machine base.
- Tighten the miter lock handle. For precise cuts, check the angle of cut for the fence against the wheel with a protractor, bevel square, or other similar device. This will secure the fence in place at desired angle. *See Figure 12.*

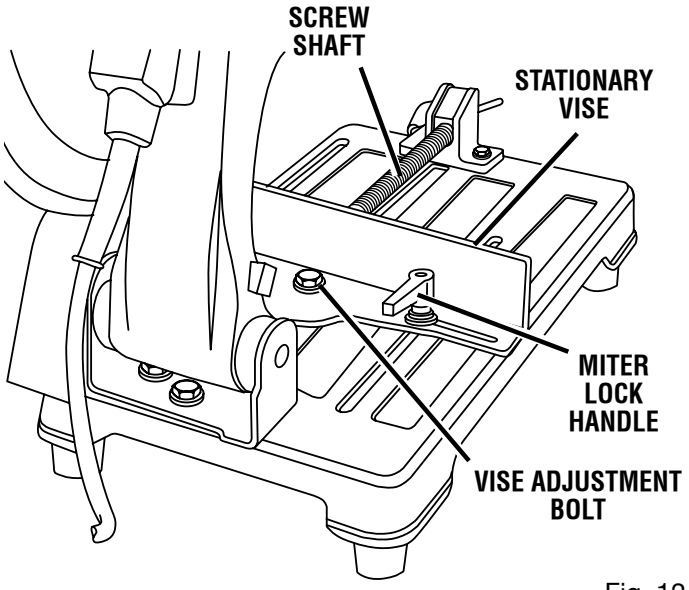

Fig. 12

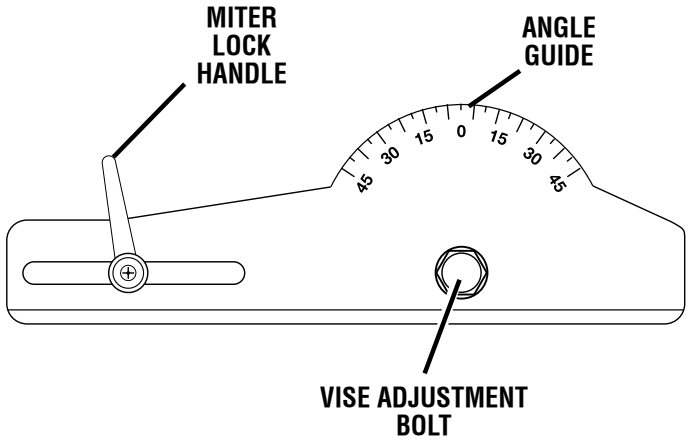

Fig. 13

TO ADJUST DEPTH STOP

See Figure 14.

The depth stop limits the wheel's downward travel. It allows the wheel to go below the machine base enough to maintain full cutting capacities.

The adjustable depth stop is a bolt threaded into the pivot bracket at the rear. To adjust the depth stop use the arbor wrench supplied to raise or lower the depth stop bolt.

The depth stop is factory set to provide maximum cutting capacity for the 14 in. (356 mm) abrasive wheel provided with your cut-off machine.

When the diameter of the wheel has been reduced due to wear, it may be necessary to adjust the depth stop to provide maximum cutting capacity. When a new abrasive wheel is installed, it is necessary to check the clearance of the wheel to the machine base support.

WARNING:
Failure to unplug cut-off machine could result in accidental starting causing possible serious personal injury.

- Unplug your cut-off machine.
- Loosen the depth stop bolt.
- The depth stop is lowered by turning the depth stop bolt clockwise and raised by turning the bolt counterclockwise.
- By pressing down on the machine arm, lower the wheel and check clearance and maximum cutting distance (distance from adjustable stationary vise where wheel enters) to front of machine base slot.
- Adjust if necessary.
- Tighten the depth stop bolt with the arbor wrench provided.

CAUTION:
Do not start your cut-off machine without checking for interference between the wheel and the machine base support. Damage may result to the wheel if it strikes the machine base support during operation of the machine.

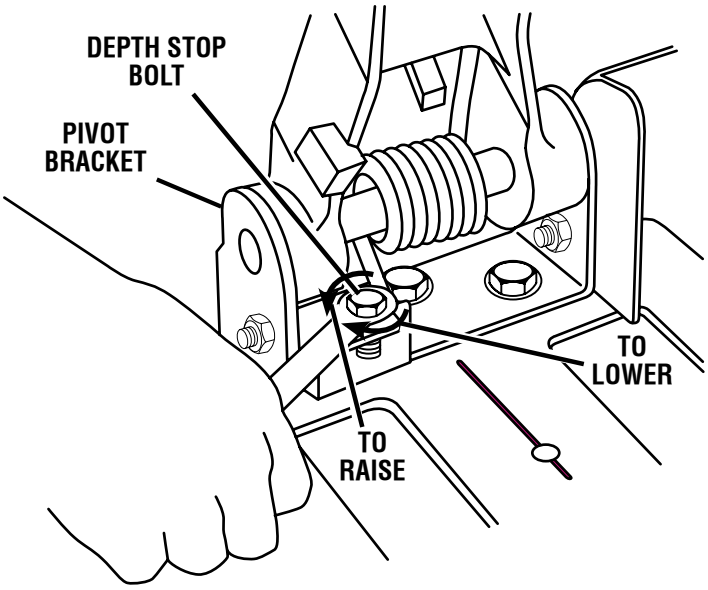

Fig. 14

WARNING:
When servicing, use only identical RIDGID replacement parts. Use of any other part may create a hazard or cause product damage.

GENERAL

Avoid using solvents when cleaning plastic parts. Most plastics are susceptible to damage from various types of commercial solvents and may be damaged by their use. Use a clean cloth to remove dirt, carbon dust, etc.

CAUTION:
Do not at any time let brake fluids, gasoline, petroleum-based products, penetrating oils, etc. come in contact with plastic parts. They contain chemicals that can damage, weaken or destroy plastic.

LUBRICATION

All of the bearings in this tool are lubricated with a sufficient amount of high grade lubricant for the life of the unit under normal operating conditions. Therefore, no further lubrication is required.

WARNING:
Keep extension cords away from the cutting area and position the cord so that it will not get caught on materials, tools, etc., during cutting operation.

WARNING:
Check extension cords before each use. If damaged, replace immediately. Never use tool with a damaged cord since touching the damaged area could cause electrical shock resulting in serious injury.

WARNING:
Always wear safety goggles or safety glasses with side shields during power tool operation or when blowing dust. If operation is dusty, also wear a dust mask.

WARNING:
To ensure safety and reliability, all repairs — with the exception of the externally accessible brushes — should be performed by a RIDGID Authorized Service Center.

BRUSH REPLACEMENT

See Figure 15.

Your cut-off machine has externally accessible brush assemblies that should be periodically checked for wear.

Proceed as follows when replacement is required:

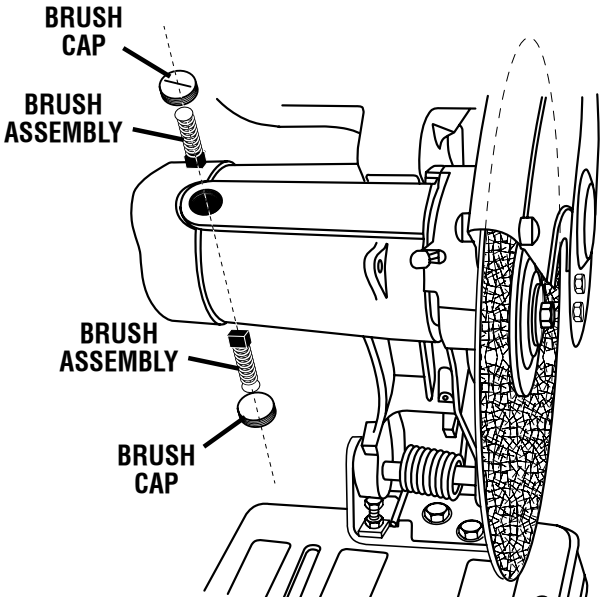

Fig. 15

WARNING:
Failure to unplug cut-off machine could result in accidental starting causing possible serious personal injury.

- Unplug your cut-off machine.
- Remove brush cap with a screwdriver. Brush assembly is spring loaded and will pop out when you remove brush cap.
- Remove brush assembly.
- Check for wear. Replace both brushes when either has less than 1/4 in. length of carbon remaining. **Do not** replace one side without replacing the other.
- Reassemble using new brush assemblies. Make sure curvature of brush matches curvature of motor and that brush moves freely in brush tube.
- Make sure brush cap is oriented correctly (straight) and replace.
- Tighten brush cap securely. **Do not** overtighten.

TROUBLESHOOTING

PROBLEM	CAUSE	SOLUTION
Machine does not start	1. Power cord not plugged in.	1. Plug in cord.
	2. Power cord is damaged.	2. Have the cord replaced at your nearest authorized service center.
	3. Circuit breaker is tripped.	3. Reset circuit breaker.
	4. Circuit fuse is blown.	4. Replace circuit fuse.
	5. Switch is damaged or burned out.	5. Have the switch replaced at your nearest authorized service center and request a voltage check from the power company.
Motor does not reach full speed or power	1. Voltage from power source is low.	1. Request a voltage check from the power company.
	2. Circuit is overloaded.	2. Test on a different circuit or without anything else on circuit.
	3. Motor burned out.	3. Have tool serviced and request a voltage check from the power company.
	4. Fuses or circuit breakers are wrong size.	4. Have an electrician replace with a 15 amp fuse or circuit breaker.
	5. Extension cord is too long.	5. Use a shorter extension cord.
	6. Switch is defective.	6. Have the switch replaced at your nearest authorized service center.
Motor stalls, blows fuses, or trips circuit breakers.	1. Switch is defective.	1. Have the switch replaced at your nearest authorized service center.
	2. Voltage from source is low.	2. Request a voltage check from the power company.
	3. Fuses or circuit breakers are wrong size or defective.	3. Have an electrician replace with a 15 amp fuse or circuit breaker.
Motor overheats.	1. Motor is overloaded.	1. Request a voltage check from the power company.
	2. Wheel is being fed into work too fast.	2. Feed wheel into work slower.
Machine is noisy when running.	1. Motor needs attention.	1. Have the motor checked at your nearest authorized service center.
Wheel hits table.	1. Wheel not properly installed.	1. See “Removal and Installation of Wheel” section.
	2. Depth stop setting incorrect.	2. Adjust the depth stop. See “Depth Stop” section.
Wheel does not cut through material.	1. Depth stop setting incorrect.	1. Adjust the depth stop. See “Depth Stop” section.
	2. Wheel worn too much.	2. Replace with a new 14 in. (356 mm) abrasive cut off wheel.
	3. Incorrect cutting operation.	3. See “Cut-Off” section.
Machine vibrates or shakes excessively.	1. Wheel is out-of-round.	1. Replace wheel.
	2. Wheel is chipped	2. Replace wheel.
	3. Wheel is loose.	3. Tighten wheel bolt on arbor.
	4. Machine is not secure.	4. Check and tighten all hardware.
	5. Work surface is uneven.	5. Relocate and secure on a flat surface.

NOTES

WARRANTY

RIDGID® HAND HELD AND STATIONARY POWER TOOL LIMITED THREE YEAR WARRANTY AND 90-DAY SATISFACTION GUARANTEE POLICY

This product is manufactured by One World Technologies, Inc., under a trademark license from RIDGID, Inc. All warranty communications should be directed to One World Technologies, Inc., attn: RIDGID handheld and stationary power tool technical service at (toll free) 1-866-539-1710.

90-DAY SATISFACTION GUARANTEE POLICY

During the first 90 days after the date of purchase, if you are dissatisfied with the performance of this RIDGID tool for any reason you may return the tool to the dealer from which it was purchased for a full refund or exchange. To receive a replacement tool you must present proof of purchase and return all original equipment packaged with the original product. The replacement tool will be covered by the limited warranty for the balance of the three year warranty period.

WHAT IS COVERED UNDER THE LIMITED THREE YEAR WARRANTY

This warranty covers all defects in workmanship or materials in this RIDGID tool for the three year period from the date of purchase. This warranty is specific to this tool. Warranties for other RIDGID products may vary.

HOW TO OBTAIN SERVICE

To obtain service for this RIDGID tool you must return it, freight prepaid, to an authorized RIDGID service center for hand held and stationary power tools. You may obtain the location of the authorized service center nearest you by calling (toll free) 1-866-539-1710 or by logging on to the RIDGID website at www.ridgid.com. When requesting warranty service, you must present the proof of purchase documentation, which includes a date of purchase. The authorized service center will repair any faulty workmanship, and either repair or replace any defective part, at our option at no charge to you.

WHAT IS NOT COVERED

This warranty applies only to the original purchaser at retail and may not be transferred. This warranty only covers defects arising under normal usage and does not cover any malfunction, failure or defect resulting from misuse, abuse, neglect, alteration, modification or repair by other than an authorized service center for RIDGID branded hand held and stationary power tools. **RIDGID, INC. AND ONE WORLD TECHNOLOGIES, INC. MAKE NO WARRANTIES, REPRESENTATIONS OR PROMISES AS TO THE QUALITY OR PERFORMANCE OF ITS POWER TOOLS OTHER THAN THOSE SPECIFICALLY STATED IN THIS WARRANTY.**

ADDITIONAL LIMITATIONS

To the extent permitted by applicable law, all implied warranties, including warranties of MERCHANTABILITY or FITNESS FOR A PARTICULAR PURPOSE, are disclaimed. Any implied warranties, including warranties of merchantability or fitness for a particular purpose, that cannot be disclaimed under state law are limited to three years from the date of purchase. One World Technologies, Inc. is not responsible for direct, indirect, incidental or consequential damages. Some states do not allow limitations on how long an implied warranty lasts and/or do not allow the exclusion or limitation of incidental or consequential damages, so the above limitations may not apply to you. This warranty gives you specific legal rights, and you may also have other rights which vary from state to state.

One World Technologies, Inc.
Hwy. 8
Pickens, SC 29671

OPERATOR'S MANUAL

14 in. ABRASIVE CUT-OFF MACHINE

CM1450

CUSTOMER SERVICE INFORMATION

For parts or service, contact your nearest RIDGID authorized service center. Be sure to provide all relevant information when you call or visit. For the location of the authorized service center nearest you, please call 1-866-539-1710 or visit us online at www.ridgid.com.

The model number of this tool is found on a plate attached to the motor housing. Please record the serial number in the space provided below. When ordering repair parts, always give the following information:

Model No. CM14500

Serial No. _____

983000-392 (REV:01)
8-06